

WINDOBSERVER IS

Intrinsically safe anemometer. Precision wind measurement for hazardous areas

PRODUCT OVERVIEW

WindObserver IS is designed to provide high accuracy wind speed and direction measurement in hazardous environments. WindObserver IS is certified as 'instrinsically safe' for use in the 'hazardous area', whilst the associated power and communications interface is located in the 'non-hazardous area'.

The ATEX, IECEx & UKEX certification ensures that the wind system may be deployed over a large geographical area.

Customer selectable vector rolling average and 3 second gust in accordance with WMO guidelines.

KEY FEATURES & BENEFITS

01 Intrinsically safe: ATEX, IECEx & UKEX certification.

02 Low voltage or optional mains power supply.

03 Galvanic isolation.

04 ASCII or NMEA serial output.

05 0-75m/s wind speed operation.

06 Averaging/gusts to WMO guidelines.

07 Reduced offshore maintenance costs.

08 Easy to install and long operational life.

TYPICAL APPLICATIONS

- Offshore oil production and drilling platforms.
- Support tankers.
- Onshore petrochemical plants.
- Helidecks in hazardous environments.
- Paint spray booths.

WindObserver IS is designed for use in potentially explosive atmospheres.



WINDOBSERVER IS

Intrinsically safe anemometer. Precision wind measurement for hazardous areas

TECHNICAL SPECIFICATION

Wind Speed	
Range	0 - 75 m/s (0-168mph)
Accuracy	<2% RMSE @ 12m/s
Resolution	0.01 m/s
Starting threshold	0.01 m/s
Offset	±0.01 m/s

Wind Direction	
Range	0 - 360°
Accuracy	<2% RMSE @ 12m/s
Resolution	1°
Dead band direction	none

Measurement	
Digital output rate	1Hz, 2Hz or 4Hz
Parameters	UV and polar
Units	m/s, knots, mph, kph, ft/min
Average selectable)	Rolling average - 1, 2, 10 m.n, Gust - 3s
Block average	0-3600s

Digital output	
Communication	RS422, full duplex to LVPCI
Baud rates temperature	1200, 2400, 4800, 9600, 19200
Formats	8 bit data; odd, even or no parity
Anemometer status	Supplied as part of standard Gill message (NMEA output includes V and A codes as part of the message)

Accessories	
Pipe mount	Contact Gill
Software	WindView software for displaying data*

WindObserverIS



Power supply	
Anemometer only	6-12 VDC, 30mA peak (from LVPCI) all circuits protected to 0.8 joules

Mechanical	
External construction	380mm x 210mm
Size	1.9kg

Environmental	
Protection class	IP66 (NEMA4X)
Humidity	0% to 100% RH
Operating temperature	-30°C to +70°C
Precipitation	300mm/hr
Storage temperature	-50°C to +75°C

Approvals	
Intrinsic safety	ATEX, IECEx & UKEX certification. Certificates available to view in full on gillinstruments.com

Operational	
Factory calibration	Traceable to National Standards

WINDOBSERVER IS

Intrinsically safe anemometer. Precision wind measurement for hazardous areas

Hazardous area



WindObserver IS
Intrinsically safe ultrasonic anemometer

ATEX and IECEx certification is valid for systems that include the WindObserver IS with a Gill Power & Communications Interface only.

Non-hazardous area



Low Voltage (DC)
Power & Communications Interface (LVPCI)

(Mains power adaptor option also available - see page 5)

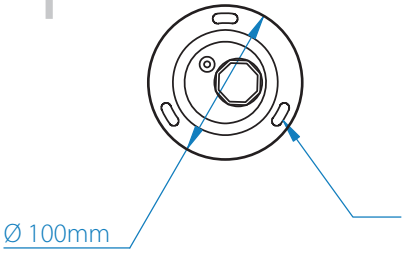

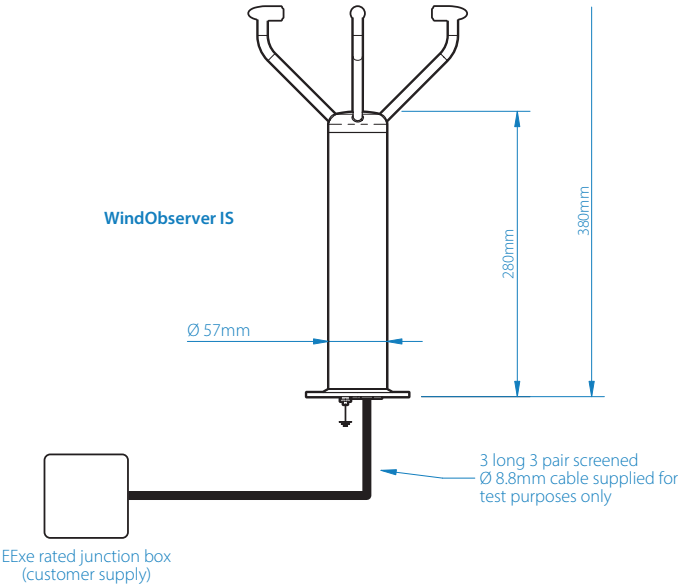

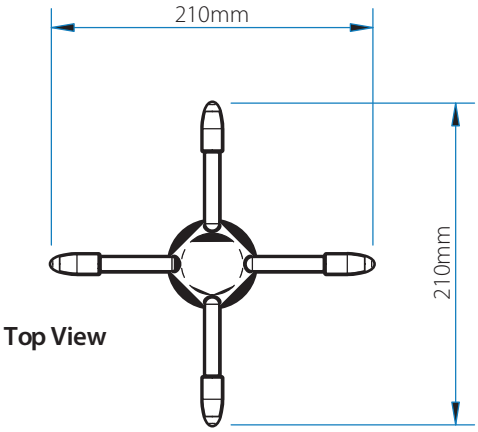

Designed and manufactured in the UK by Gill Instruments Limited. Specifications may be subject to change without prior notice.

1954-004 Issue 12
© 2026 Gill Instruments

gillinstruments.com

MORE INFO

For more information about Gill's WindObserver range, please email **contact.gi@gill.group**

WINDOBSERVER IS

Intrinsically safe anemometer. Precision wind measurement for hazardous areas

Low Voltage Power & Communications Interface (LVPCI) for use in non-hazardous areas

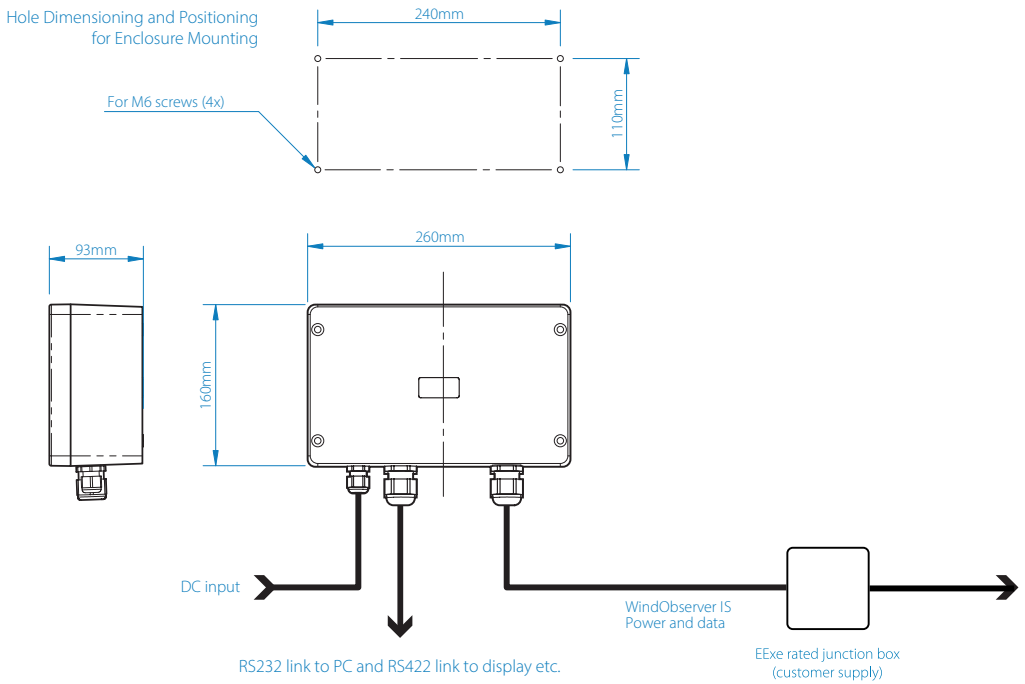

Inputs & Outputs	
Digital input	RS422 (data from WindObserver IS to LVPCI)
	Data lines between the anemometer and power supply opto-isolated and protected with zenner barriers
Digital output	RS232 and RS422 (data from LVPCI)

Inputs power input	
Power requirement	DC supply
Input power	9-30 VDC at 200 mA max
	Galvanic isolation between input power and WindObserver IS
	No external earth required
Output power	10.5 VDC at 50 mA to WindObserver IS (fused 100 mA)

Mechanical	
External construction	Fibox Euronord polyester
Weight	2.4 kg
Size	260 x 160 x 93mm
	Refer to additional information drawing on datasheet or manual

Environmental	
Moisture protection	IP54
Operating temperature	-30°C to +60°C
Storage temperature	-50°C to +75°C
Humidity	5% to 90% RH
EMC	EN 61326-2-1:2013, EN 61204-3:2000, EN 60945:2002 clause 9 & 10

Certifications & Approvals	
Instrinsic safety	ATEX, IECEx & UKEX certification. Certificates available to view in full on gillinstruments.com

1954-004 Issue 12
© 2026 Gill Instruments

gillinstruments.com

MORE INFO

For more information about Gill's WindObserver range, please email **contact.gi@gill.group**

WINDOBSERVER IS

Intrinsically safe anemometer. Precision wind measurement for hazardous areas

Power Requirement	
Input voltage	90-264 VAC
Output voltage	75 mW
Unit power consumption (no load input power)	75 mW
Input power over voltage protection limit	not present
Input power reverse-polarity protection limit	N/A
Input power protection duration limit	internal T1.0A/250 VAC fuse

Mechanical	
Moisture protection	IP20
Operating temperature	0°C to +60°C
Storage temperature	-40°C to +85°C
Humidity	5% to 95% RH
Humidity	EN 61000-6-3:2007 EN 61000-6-1:2007

1954-004 Issue 12
© 2026 Gill Instruments

gillinstruments.com

MORE INFO

For more information about Gill's WindObserver range, please email **contact.gi@gill.group**

OBSERVATOR
instruments

As a representative of this supplier, we – from Observator – distribute these products. Originating from the Netherlands, Observator has grown into an internationally oriented company with a worldwide distribution network.

For more information contact Observator Instruments:

Australia
T: +61 3 8706 5000
E: sales.au@observator.com / service.au@observator.com

Germany
T: +49 (0)152 02047306 / +49 (0)152 02047308
E: contact@observator.com

The Netherlands
T: +31 (0)180 463411
E: sales@observator.com / service@observator.com

Poland
T: +48 537 209 665
E: a.miller@observator.com

Singapore
T: +65 68 72 08 63
E: sales@observator.sg

United Kingdom
T: +44 (0)783 346 4884
E: info.uk@observator.com

Welcome to the world of Observator

Since 1924 Observator has evolved to be a trend-setting developer and supplier in a wide variety of industries. Originating from the Netherlands, Observator has grown into an internationally oriented company with a worldwide distribution network and offices in Australia, Germany, the Netherlands, Singapore and the United Kingdom.

www.observator.com

The Observator range is in continuous development and so specifications may be subject to change without prior notice.